ERP02ILNGQC

Solera

2-way switch / Light switch 10AX 250V~. Flush.

2-way switch / Light switch 10AX 250V~. Flush. Graphite colour. Without frame. Quick connection.

Features

Common applications	Indoor domestic / tertiary environment (Interior of home, offices, shops, etc.)
Mechanism type	Switch
Type of installation	Flush
Pilot light	Yes
Rated current	10AX
Nominal voltage	250V~ (50/60 Hz)
Connection type	Fast connection
Flexible cable section	Up to 2.5 mm²
Rigid cable section	Up to 2.5 mm²
Type of operation	Rocker key
With fixing claws	Yes

Technical data

Fire resistance (GWEPT)	850 °C
Heat resistance (Ball pressure)	70/125 °C
Free of halogens	Yes

Regulations

CE marking	Yes

Portalámparas y Accesorios Solera S.A.U. Pol. Ind. Fuente del Jarro C/ Villa de Madrid, 53 46988 Paterna (Valencia) España
+34 961 322 301 | solera@psolera.com | www.psolera.com

UK marking	Yes
CMim marking	Yes
According to Regulations UNE/EN	UNE-EN 60669-1:2018
In accordance with the Low Voltage Electrotechnical Regulations (REBT)	Yes
According to European Directive 2014/35 / EU. Low voltage directive	Yes

Sustainability

According to European Directive 2011/65/UE (RoHS)	Yes
According to European Directive 2012/19/UE (RAEE2)	Yes
According to Regulations (RoHS)	UNE-EN IEC 63000:2022

Logistics and packaging

Unit EAN code	8423220235229
EAN code container	8423220234758
EAN code packaging	18423220234755
Units packaging	10
Units carton	120
Pallet Units	4320
Packaging Measurements cm	25,2x14x8
Packaging Measures cm	44,5x26,8x32,2
Unit weight (g)	70
Container Weight (Kg)	0,8396
Packaging Weight (Kg)	10,6882
Tariff code	85366990

Sketch

ERP02ILNGQC

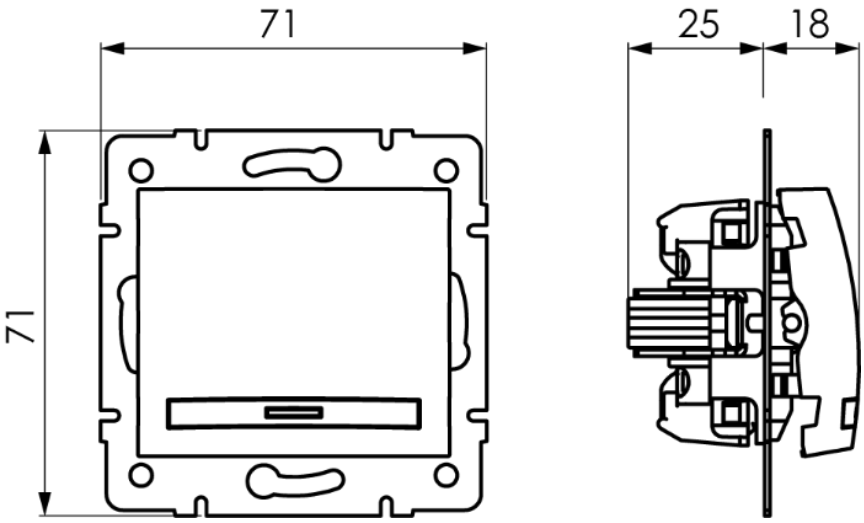

Documentation and downloads

- Commercial doc. (3.28MB)
- Safety Information (0.38MB)
- Flush switches of Eruopa range (Solera)
- Assembly flush switches form Europa range (Solera)