886AG

Watertight connection box 220 x 170 x 140 mm without cones. Grey colour and DIN rail.

Watertight connection box without cones in grey, sized 220 x 170 x 140 mm. Designed for secure cable junctions in demanding indoor or outdoor installations, it provides IP65 protection and IK08 impact resistance. The quarter-turn screw closure allows quick opening while keeping a reliable seal. It includes a 35 mm DIN rail for mounting modular devices.

Features

Installation method	Surface
Use	Domestic / Tertiary
Location type	Exterior and interior
Metallic DIN profile	Yes
Dimensions outside (mm) (width x height x depth)	230x180x150
Dimensions inside (mm) (Width x Height x Depth)	220x170x140
Case material	Insulation
Case color	Grey (RAL7035)
Cap color	Grey (RAL 7035)
Ticket type	Smooth sides (machining inlets)
Fixation System (For surface)	Exterior
Sealable	Yes
Lid closure system	1/4 turn screw with spring
Possibility of mounting strips	Yes (not included)
Possibility of mounting plate	Yes (not included)
Possibility of mounting DIN rail	Yes (included)
Captive screw	Yes
Captive Lid	Yes
Valid for photovoltaic installations	Yes
Common applications	Industrial environments (factories, warehouses, etc.)

Technical data

Protection Degree (IK)	IK08
Impact shock resistance	Strong
Insulation class	Class II
Fire resistance (GWEPT)	650 °C
Heat resistance (Ball pressure)	70 °C
Ambient operating temperature	-5 °C ; +60 °C
Work stress	<1000 Vac ; 1500 Vdc
UV resistance	Yes
Free of halogens	Yes

Regulations

CE marking	Yes
UK marking	Yes
CMim marking	Yes
According to Regulations UNE/EN	UNE-EN 60670-1:2022 UNE- EN 60670-22:2007
In accordance with the Low Voltage Electrotechnical Regulations (REBT)	Yes
According to European Directive 2014/35 / EU. Low voltage directive	Yes

Sustainability

According to European Directive 2011/65/UE (RoHS)	The Directive 2011/65/EU (RoHS II) is not applicable as it does not correspond to the definition of Electrical and Electronical Equipment (EEE) as per article 3.1
According to European Directive 2012/19/UE (RAEE2)	Not applicable because it does not meet the definition of Electrical and Electronic Equipment (EEE) as described in Article 3.1(a) of Directive 2012/19/EU (WEEE II).

Logistics and packaging

Unit EAN code	8423220064942
EAN code container	8423220064942
EAN code packaging	18423220064949

886AG

Units packaging	1
Units carton	20
Pallet Units	240
Packaging Measures cm	59,5x39,5x64
Unit weight (g)	603
Container Weight (Kg)	0,613
Packaging Weight (Kg)	13,51
Tariff code	85381000

Sketch

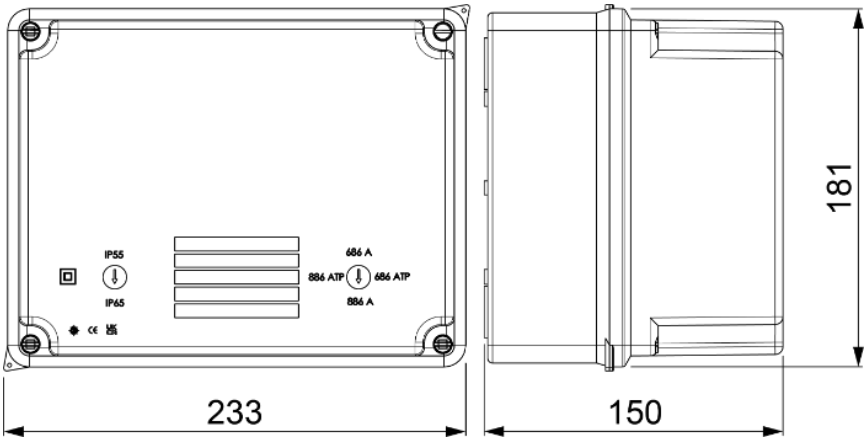

Documentation and downloads

- Assembly instructions (1.11MB)
- Safety Information (0.38MB)
- Mounting junction boxes (Solera)
- Commercial doc. (2.73MB)
- Junction boxes IP65/55, IK07-08-09 (Solera)